VISM®

DUAL URBAN OPTIC (DUO)

OWNER'S MANUAL

DUAL URBAN OPTIC (DUO)

Congratulations on the purchase of your new VISM® Dual Urban Optic (DUO)! The DUO Optic gives you some very unique features not found in any other Optic in the marketplace. The DUO is TWO separate Optics integrated into a single optic body. You have an Illuminated Glass Etched Reticle 4X Magnification Scope set to 1½" centerline scope height above the optics rail and a 30° Offset Green Reflex Optic also set to the same Barrel Bore Height as the scope. You can maintain the same cheek rest on the stock and quickly switch back and forth between the Scope and Reflex sight by just rotating the firearm 30°. This allows you to use the 4X Scope for intermediate and longer range targets and the 1X Green Dot Reflex Sight for close range targets.

VISM manufacturers' two versions of the DUO optic: a Right Hand version (VDUO434DGB) with the reflex optic offset 30° to the right of the scope and a Left Hand version (VDUO434DGBLH) with the reflex optic offset -30° to the left of the scope. The two models functions exactly the same, except the windage adjustments for the scope and reflex optic are opposite of from each model.

Backed by a Lifetime Limited Warranty, the VISM® Optic will provide you with years of reliable service. This Owner's Manual will help you understand all of the features of your new Optic. Please follow all instructions carefully before initial use to experience the best performance.

Right Handed DUO Optic Features (VDUO434DGB)

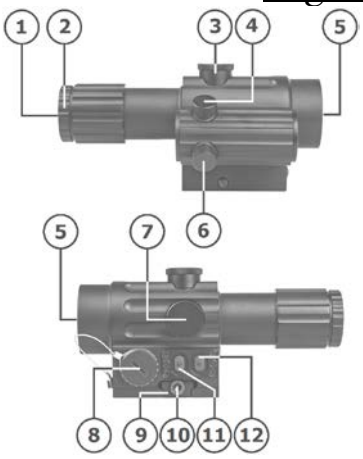

1. Ocular Lens
2. Quick Focus Ring
3. Scope Elevation Cap and Adjustment
4. Reflex Optic Elevation Cap and Adjustment
5. Objective Lens
6. Reflex Optic Windage Cap and Adjustment
7. Scope Windage Cap and Adjustment
8. Tethered Battery Cap and Battery Compartment
9. Mount Clamp
10. Allen Head Mount Bolt/ Recoil Lug
11. Button for Scope Illuminated Reticle
12. Button for Green Dot Reticle

Left Handed DUO Optic Features (VDUO434DGBLH)

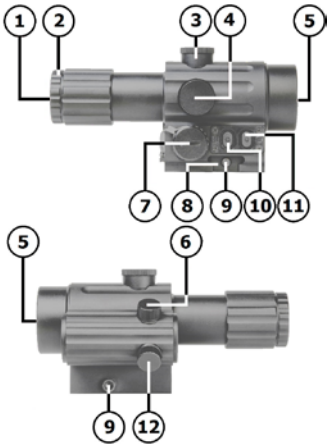

1. Ocular Lens
2. Quick Focus Ring
3. Scope Elevation Cap and Adjustment
4. Scope Windage Cap and Adjustment
5. Objective Lens
6. Reflex Optic Elevation Cap and Adjustment
7. Tethered Battery Cap and Battery Compartment
8. Mount Clamp
9. Allen Head Mount Bolt/ Recoil Lug
10. Button for Scope Illuminated Reticle
11. Button for Green Dot Reticle
12. Reflex Optic Windage Cap and Adjustment

CAUTION: BE SURE THAT YOUR FIREARM IS UNLOADED AND POINTED IN A SAFE DIRECTION. PRACTICE SAFE FIREARMS HANDLING PROCEDURES AT ALL TIMES.

NOTE: IF YOU ARE UNFAMILIAR WITH THE PROCESS OF MOUNTING AN OPTIC, IT MAY BE NECESSARY TO EMPLOY THE SERVICE OF A QUALIFIED GUNSMITH.

Mounting the DUO Optics

The DUO Optics are equipped with a mount that is compatible with Weaver/ Picatinny/ MIL-STD 1913 type rails. On one side of the optic base is an Allen Head Mount Bolt.

Use the supplied 4mm Allen wrench to turn the Allen Head Mount Bolt Counter-Clockwise (↺) to move the Mount Clamp open wide enough to place the DUO optic onto the rail. When the firearm is shouldered and you have a proper cheek rest on the stock, make sure you place the DUO optic onto the rail in the correct position for a proper eye relief for the 4X scope. Place the Allen Head Mount Bolt/ Recoil Lug into one of the cross slots on the rail. Turn the Allen Head Mount Bolt Clockwise (↻) to close the Mount Clamp onto the rail to secure the optic onto the firearm.

Dismounting the DUO Optic

To remove the DUO optic from a rail, turn the Allen Head Mount Bolt Counter-Clockwise (↺) to move the Mount Clamp open wide enough to remove the optic from the rail.

Focusing the Scope Reticle

CAUTION: VIEWING THE SUN WITH THIS SCOPE OR ANY OTHER OPTICAL DEVICE CAN CAUSE PERMANENT INJURY TO THE EYE; INCLUDING BLINDNESS.

Holding the DUO Scope at the proper distance from your eye, in order to achieve a Full Field of View, the reticle should appear sharp and clear. If not, it will be necessary to adjust the focus by turning the Quick Focus Ring.

1. Make quick glances through the eyepiece at a featureless bright surface such as a white wall, or the open sky. Please point a cleared firearm in a Safe Direction at all times.
2. Turning the Quick Focus Ring Counter-Clockwise (↺) will extend the Ocular Lens outward, generally suitable for those who are far sighted. Turning the Quick Focus Ring Clockwise (↻) will draw the Ocular Lens inward, generally suitable for those who are near sighted.
3. Fine tune the adjustments until the reticle appears sharp and clear. Once the Ocular Lens reaches its outer limits of adjustment, be sure not to force it as doing so will cause damage to the eyepiece.

Windage and Elevation Adjustment Dials

The DUO scope is equipped with Elevation and Windage Adjustment Dials for both the Scope and Green Dot optics, which changes the Reticle/ Dot point of aim, relative to your rifles point of impact. The Green Dot Optic turrets are smaller in diameter than the Scope's larger turrets.

SCOPE: The Scope Elevation Adjustment Dial is located on Top of the Scope Body and is responsible for the Up and Down movements of the Scope's Urban Tactical Reticle.

The Scope Windage Adjustment Dial is located on the side of the Scope Body and is responsible for the Left and Right movements of the of the Scope's Urban Tactical Reticle. Please refer to the optic picture diagrams on the front page to determine the location of the Scope's Windage Dial for your particular model. You will need to remove the larger Scope Elevation & Windage Caps to access the Elevation & Windage Adjustment Dials. Turn the Caps Counter-Clockwise (↺) to remove.

GREEN DOT OPTIC: The Green Dot Elevation Adjustment Dial is located on Top of the Green Dot Optic Body and is off-set at a 30° angle, and is responsible for the Up and Down movements of the Green Dot in the Reflex Optic.

The Green Dot Windage Adjustment Dial is located on side of the Green Dot Optic Body, also set at a 30° off-set, and is responsible for the Left and Right movements of the Green Dot in the Reflex Optic. Please refer to the optic picture diagrams on the front page to determine the location of the Green Dot's Windage Dial for your particular model. You will need to remove the smaller Green Dot Elevation & Windage Caps to access the Elevation & Windage Adjustment Dials. Turn the Caps Counter-Clockwise (↺) to remove.

Set the Elevation & Windage Caps in a safe place when you remove them, so that you do not misplace them.

Both Right Hand and Left Hand Scope Reticle & Green Dot Optics Elevation Adjustments move the Reticle/ Dot in the same directions:

Turning the Elevation Adjustment Dial Clockwise (↻) will move the Reticle/ Dot Up (⇧), shifting the bullet point of impact Down (⇩).

Turning the Elevation Adjustment Dial Counter-Clockwise (↺) will move the Reticle/ Dot Down (⇩), shifting the bullet point of impact Up (⇧)

The Windage Adjustments for the Right Handed and Left Handed DUO optics are opposite of each other.

Right Hand: Scope's Urban Tactical Reticle Windage Adjustment:

Turning the Scope Windage Adjustment Dial Clockwise (↻) will move the Reticle Left (⇦), shifting the bullet point of impact Right (⇨).

Turning the Scope Windage Adjustment Dial Counter-Clockwise (↺) will move the Reticle Right (⇨), shifting the bullet point of impact Left (⇦).

Right Hand: Green Dot Windage Adjustments is as follows:

Turning the Green Dot Windage Adjustment Dial Clockwise (↻) will move the Dot Right (⇨), shifting the bullet point of impact Left (⇦).

Turning the Green Dot Windage Adjustment Dial Counter-Clockwise (↺) will move the Dot Left (⇦), shifting the bullet point of impact Right (⇨).

Left Hand: Scope's Urban Tactical Reticle Windage Adjustment:

Turning the Scope Windage Adjustment Dial Clockwise (↻) will move the Reticle Right (⇨), shifting the bullet point of impact Left (⇦).

Turning the Scope Windage Adjustment Dial Counter-Clockwise (↺) will move the Reticle Left (⇦), shifting the bullet point of impact Right (⇨).

Left Hand: Green Dot Windage Adjustments is as follows:

Turning the Green Dot Windage Adjustment Dial Clockwise (↻) will move the Dot Left (⇦), shifting the bullet point of impact Right (⇨).

Turning the Green Dot Windage Adjustment Dial Counter-Clockwise (↺) will move the Dot Right (⇨), shifting the bullet point of impact Left (⇦).

The Elevation and Windage Adjustment Dials also feature Audible and Tactile Clicks which not only can you see and hear the Click adjustments, but you can feel them as well.

Each of the Scope's Elevation and Windage Clicks moves the reticle point of aim a ½ MOA* at 100 Yards. See the chart below to see the amount of movement of each click of the Adjustment Dials will move the Scope's Reticle at various distances.

Elevation/Windage movement per click. *1 MOA = 1.047 Inches at 100 Yards				
100 yards	200 yards	300 yards	400 yards	500 yards
½MOA	1 MOA	1½ MOA	2 MOA	2½ MOA

Zeroing the Optic

After you have completed installation of the Optic it will be necessary to adjust the Optics point of aim to match the rifles point of impact. This can be accomplished using several methods, but we recommend the use of a Bore Sighting Device to save time and ammunition. Using a Bore Sighting Device will ensure that the shots land "on paper". Follow the Manufacturer's Instructions for the Bore Sighting Device that you choose in order to achieve the best results. You are now ready to finalize your Zero.

CAUTION: ALWAYS BE SURE TO REMOVE THE BORE SIGHTING DEVICE BEFORE SHOOTING LIVE AMMUNITION. FAILURE TO DO SO CAN CAUSE DAMAGE TO THE FIREARM OR INJURY TO YOURSELF AND THOSE AROUND YOU.

CAUTION: WHEN OPERATING ANY TYPE OF FIREARM ALWAYS USE PROPER EYE AND EAR PROTECTION. BE SURE TO USE YOUR FIREARM IN AN AREA THAT IS PERMISSIBLE UNDER LOCAL, STATE, AND FEDERAL LAW.

Bore Sighting alone is not sufficient enough to ensure an accurate Zero. You must shoot your firearm at the range in order to confirm a 100% accurate Zero. Follow these steps to fine tune the Optic adjustments:

1. Secure your firearm using a steady platform such as a rifle bench rest or sand bags.
2. Fire 3 to 5 carefully aimed shots at a target that is set to the desired Zeroing distance.
3. Observe where the bullet grouping has struck the target and make adjustments to the Elevation and Windage settings as necessary until the point of aim matches the point of impact.
4. Continue with this process until you have achieved the desired level of accuracy.
5. The Optic is now Zeroed to your firearm at the distance that you have chosen.

NOTE: When Zeroing the Green Dot Optic, the Green Dot should be zeroed with the optic turned at the 30° angle. The Green Dot Elevation Turret should be at the 12 O'clock position when it is turned at the proper 30° angle. As the Green Dot Elevation and Windage adjustments are also offset at 30°, the Green Dot Elevation and Windage adjustments should also be made with the optic/ firearm turned at the 30° angle.

It is important to remember that many factors can affect the accuracy of the optic's zero including temperature, humidity, elevation, distance, angle, bullet type/ shape, bullet weight, powder charge, and other conditions. Changing ammunition brands can affect your optic's zero and accuracy as well.

Control Panel

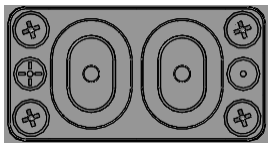

The electronic Control Panel features two push buttons.

- On the left side of the Control Panel you will see a symbol featuring a Scope reticle. The left push button controls the Scope's Illuminated Reticle functions.
- On the right side of the panel you will see a symbol featuring a Dot Optic Reticle. The right push button controls the Green dot brightness and functions.

Illuminated Urban Tactical Reticle

The DUO Optic is equipped with a Glass Etched Blue Illuminated Urban Tactical Reticle, for use when exterior lighting conditions are less than optimal. The Left Button on the Electronic Control Panel, located on the Right side of the Optic body, controls the Illuminated Urban Tactical Reticle for the Scope. There are 5 brightness levels for the Illuminated Urban Tactical Reticle.

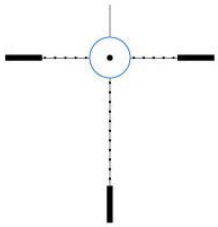

- Pressing the Left Button will turn the Illuminated Urban Tactical Reticle On.
- To adjust the brightness level of the Reticle you simply press Left Button again to increase the brightness up one level each time. You can increase the Brightness level to Level #5, which is the highest setting. Pressing the Left Button one more time at the Level #5 brightness level, will then turn the Illuminated Reticle Off.
- Another method to turn the Reticle Off with memory is to press and hold down the

Left Button for a second or two. The Reticle will turn Off and remember the brightness setting that it was last on. The next time you turn the Reticle illumination on it will start at the last brightness setting it was on, when powered off in this method.

- With the Reticle Illumination turned off or if the battery goes dead, the scopes reticle will still be viewable and functional. The reticle will just appear as a black outline of the reticle.

Green Dot Reticle

The DUO Optic 30° Offset Green Dot Reflex Optic is controlled by the Right Button on the Electronic Control Panel, located on the right side of the Optic body. There are 5 brightness levels for the Green Dot.

- Pressing the Right Button will turn the Green Dot On, to Brightness Level #1.
- To adjust the brightness level of the Green Dot you simply press Right Button again to increase the brightness up one level each time. You can increase the Brightness level to Level #5, which is the highest setting. Pressing the Right Button one more time at the Level #5 brightness level, will then turn the Green Dot Off.
- Another way to turn the Green Dot Off with memory is to press and hold down the Right Button for a second or two. The Green Dot will turn Off and remember the brightness setting that it was last on. The next time you turn the Green Dot on it will start at the last brightness setting it was on, when powered off in this method.
- With the Green Dot turned off or if the battery goes dead, the Green Dot will not be viewable or functional.

Adjust the brightness level of the reticle and green dot as needed in accordance with the surrounding lighting conditions. Be sure to turn the Illuminated Reticle & Green Dot Off when not in use to preserve battery life.

Battery Installation

On the side that has the Electronic Control Panel you will find the tethered Battery Cap with a machined notch in the center. If the Battery Cap is too difficult to turn, you may use a small coin to break it loose. The Battery Cap is removed by turning the Battery Cap Counter-Clockwise (↺).

Remove the old battery and dispose of it properly. Replace it with a New 3 Volt CR123A Lithium Battery, with the positive (+) terminal facing outward. Reinstall the Battery Cap by twisting it Clockwise (↻) until snug.

If after you replace the Battery and the Illuminated Urban Tactical Reticle or Green Dot Reflex Optic does not turn On, make sure you have installed the Battery orientation correctly or try another New Battery.

Make sure that the Illuminated Urban Tactical Reticle or Green Dot Reflex Optic is turned OFF when not in use to preserve battery life. If you are going to store the Optic for a prolonged period of time it is best to remove the battery to avoid leakage that can damage the Optic.

Care and Maintenance

The VISM® Optic is shock proof, waterproof, and fog proof. However, you should never try to take it apart or clean it internally. The exposed optical lens surfaces will perform their best if they are routinely cleaned with a lens brush or a lens cloth. For a deep cleaning, you can also use high grade camera lens paper and camera lens cleaning solutions. Never use any other type of materials or solvents other than those designed specifically for optical lenses to avoid damaging the Optic. Clean the outer portion of the lens cavity first with cotton swabs, clearing as much debris and dust as possible. Then, gently clean the lenses using a circular motion starting in the center and ending at the edges. Do not rub the lenses continually; simply wipe in short circular patterns. Maintain the exterior surfaces of the Optic by removing dirt or sand by using a soft brush or a soft, dry cloth. You can also use a silicone treated cloth to restore luster and protect the Optic against corrosion. Be careful not to touch any of the lenses with the silicone cloth. It is not necessary to lubricate any part of the Optic as all of the moving parts, such as the turrets and the fast focus eyepiece, are permanently lubricated. When not in use, always store the Optic in a dry place with the lens caps on to prevent scratches to the lenses.

IF YOU ARE UNFAMILIAR WITH ANY OF THE PROCEDURES IN THIS MANUAL, ALWAYS SEEK THE HELP OF A QUALIFIED PROFESSIONAL TO AVOID DAMAGE TO THE OPTIC AND YOUR FIREARM.

VISM® DUAL URBAN OPTIC (DUO) SPECIFICATIONS

Model Number	Reticle Type	Magnification	Objective Lens Diameter	Eye Relief	Field Of View Feet @ 100 yrds	Exit Pupil Diameter	Turret Value Per Click	Max Windage & Elevation (MOA)	Lens Coating	Color Finish	Length Inches	Weight .oz
VDUO434DGB	Urban Tactical	4	34 mm	2.5	26.0	8.5 mm	½ MOA	±120	Green	Matte Black	5.8"	15.3
VDUO434DGBLH												

VISM®

A DIVISION OF NcSTAR

FOR TECHNICAL ASSISTANCE
PLEASE CALL:

1-866-NcSTAR-8
(1-866-627-8278)

www.ncstar.com