SAFETY & INSTRUCTION MANUAL

CREED PISTOL

Read the instructions and warnings in this manual CAREFULLY BEFORE using this firearm.

WALTHER ARMS, INC.

⚠ WARNING READ THESE INSTRUCTIONS AND WARNINGS CAREFULLY. BE SURE YOU UNDERSTAND THESE INSTRUCTIONS AND WARNINGS BEFORE USING THIS FIREARM. FAILURE TO READ THESE INSTRUCTIONS AND TO FOLLOW THESE WARNINGS MAY RESULT IN SERIOUS INJURY OR DEATH TO YOU OR OTHERS AND DAMAGE TO PROPERTY.

This SAFETY & INSTRUCTION MANUAL should always accompany this firearm and be transferred with it upon change of ownership or when presented to another person.
A copy of the SAFETY & INSTRUCTION MANUAL is available FREE upon request from:

WALTHER ARMS, Inc.
Attn: Service Dept
7700 Chad Colley Boulevard
Fort Smith, AR 72916

Phone: 1-479-242-8500
E-mail: service@waltherarms.com
www.WaltherArms.com

Note: This manual refers to the use of the pistol by civilian users. Instructions for law enforcement use may differ from what is described in this manual.

Throughout this instruction manual, position designations such as ”left,“ ”right,“ ”forward,“ ”rear,“ and so on, are referenced to a pistol held in a normal firing position. In other words, pointed away from the shooter, barrel in a generally horizontal direction, and with the grip of the pistol pointing downwards.
Explanations in this manual are based on right hand operation. Left-handed users should operate vice versa.
Note that the illustrations in this manual are for explanation purposes and may differ from the actual gun.

DISCLAIMER OF LIABILITY: The first concern when handling any firearm is safety. The failure to do so may result in property damage, serious bodily injury or even death. WALTHER specifically disclaims any and all liability from anyone arising out of the use of this firearm and its accessory. Under no circumstances shall WALTHER be responsible for incidental or consequential damages with respect to economic loss or injury to person or property due to negligence, improper use, failure to following instructions in this manual, unsafe handling, failure to maintain the pistol, unauthorized replacement of parts, disregard of statutory rules or laws or any other modification to the pistol.

TABLE OF CONTENTS

1 YOUR SAFETY RESPONSIBILITIES 4
1.1 SAFETY IS YOUR NUMBER ONE RESPONSIBILITY 4
1.2 Safe Storage & Transportation 7
2 AMMUNITION 9
3 PRODUCT DESCRIPTION 11
3.1 Main Features 11
3.2 Functional Elements, Model Number Identification 11
3.2.1 Loaded Chamber Viewport 12
3.2.2 Magazine Release 13
3.2.3 Slide Stop 13
3.2.4 Magazine 13
4 PREPARATION FOR FIRING 14
4.1 Inspecting the Pistol 15
4.2 Loading 16
4.2.1 Loading the Magazine 16
4.2.2 Loading the Pistol 17
4.3 Firing the CREED 18
4.4 Exchanging Magazines 20
4.5 Unloading the Pistol 20
4.6 Clearing Misfires 22
5 FIELD-STRIPPING, CLEANING, LUBRICATION AND MAINTENANCE 23
5.1 Main Components 23
5.1.1 Field-Stripping Disassembly 23
5.1.2 Field-Stripping Reassembly 25
5.2 Magazine 26
5.2.1 Magazine Disassembly 26
5.2.2 Magazine Reassembly 26
5.3 Cleaning the Pistol 27
5.4 Lubrication 28
5.5 Maintence Before Storing 29
6 ADJUSTING THE PISTOL TO ITS USER 30
6.1 Magazine Release 30
6.2 Lanyard Loop 31
6.3 Sights 31
7 LIMITED LIFETIME WARRANTY 32
8 CONTACT & SHIPPING 34
9 ACCESSORIES 35

1 YOUR SAFETY RESPONSIBILITIES

1.1 SAFETY IS YOUR NUMBER ONE RESPONSIBILITY!

At home, in the field, at the range, or anywhere, the first concern of every firearm owner should be safety. Apply the following safety rules in every situation, with any kind of firearm. If you feel uncertain about any operational aspects of your handgun, please contact WALTHER ARMS, Inc. at 1-479-242-8500 before proceeding with its operation.

⚠WARNING YOU MUST FOLLOW ALL OF THESE SAFETY RULES TO ENSURE THE SAFE USE OF YOUR FIREARM. THE FAILURE TO FOLLOW THESE BASIC FIREARM SAFETY RULES MAY RESULT IN AN UNINTENDED DISCHARGE WHICH COULD CAUSE SERIOUS PERSONAL INJURY OR DEATH TO YOU OR OTHERS AND DAMAGE TO PROPERTY.

- ALWAYS KEEP YOUR FIREARM POINTED IN A SAFE DIRECTION.
  Never point a firearm at anyone or anything you do not intend to shoot, whether or not it is loaded. This is particularly important when loading, unloading, or field stripping the gun. ALWAYS control the direction of the firearm.
- ALWAYS TREAT EVERY FIREARM AS IF IT IS LOADED AND WILL FIRE IF THE TRIGGER IS PULLED.
  Do not take anyone's word that the firearm is unloaded – always check for yourself. Never pass your firearm to another person until the action is open and you visually check that it is unloaded. Keep your firearm unloaded and safely stored when not in use.
- NEVER PLACE YOUR FINGER INSIDE THE TRIGGER GUARD OR ON THE TRIGGER UNLESS YOU INTEND TO FIRE.
  Ensure that other objects do not touch the trigger.
- ALWAYS BE SURE OF YOUR TARGET AND WHAT IS BEYOND IT.
  Always be sure of where the bullet will strike and shoot only where there is a safe back stop free of obstructions, water or other surfaces which can cause ricochets. Be sure your bullet will stop behind your target. Bullets can glance off many surfaces like rocks or surface water and travel in unpredictable directions with considerable velocity. Do not fire randomly into the sky.
- NEVER CROSS OBSTACLES SUCH AS FENCES OR STREAMS WITH A LOADED FIREARM.
- SAFE GUN HANDLING IS YOUR PERSONAL RESPONSIBILITY at all times. Firearms are dangerous and can cause serious injury or death if they are misused or used inappropriately. Safety must be the prime consideration of anyone who owns or handles firearms. Accidents are the result of violating the rules of safe gun handling and common sense. Firearm safety training is available. Contact your dealer, law enforcement agency, local sportsman's club, etc. for availability.

- YOU ARE RESPONSIBLE FOR THE FIREARM AT ALL TIMES.
  In owning a firearm, you must undertake full-time responsibility for your firearm's safety and security. You must protect yourself and all others against injury or death from misuse of the firearm 24 hours a day.
- FIREARM SECURITY IS YOUR RESPONSIBILITY. You must secure firearms safely from children and/or unauthorized users. Your firearm should always be kept unloaded and locked when not in use. A lock has been provided for this purpose. Never assume that the use of this lock is sufficient to safely secure your firearm. You must always evaluate your personal situation and employ the security system(s) that meets your needs and prevents children and unauthorized users from gaining access to your firearm.
- APPROPRIATE USE FOR YOUR FIREARM MEANS USING YOUR FIREARM FOR LEGAL PURPOSES. For example - target shooting and lawful resistance of deadly criminal force. It is your responsibility to ensure that you are in compliance with all applicable laws and ordinances regarding the use of your firearm.
- NEVER RELY ON MECHANICAL FEATURES ALONE. Only your safe gun-handling habits will ensure the safe use of your firearm. This is your responsibility
- ALWAYS SAFELY STORE AND SECURE YOUR FIREARM.
  Safe and secure storage of your firearm is one of your most important responsibilities. It is a full-time responsibility. You must always secure your firearm and ammunition separately so that they are not accessible to children and/or other unauthorized persons.
- NEVER KEEP AMMUNITION IN THE SAME LOCATION AS THE HANDGUN.
  Store each in a separate and secure place.
- ALWAYS WEAR EYE AND EAR PROTECTORS THAT ARE SPECIFIED FOR FIREARM USE every time you discharge your firearm. Make sure others in the vicinity of where you will be shooting do so as well.
- NEVER USE ALCOHOL OR DRUGS BEFORE OR WHILE SHOOTING.
  Do not use your firearm if you are on any medication which impairs, even slightly, your mental or physical ability.
- ALWAYS HAVE ADEQUATE VENTILATION.
  Discharging firearms in poorly ventilated areas, cleaning firearms, or handling ammunition may result in exposure to lead and other substances known to cause birth defects, reproductive harm, and other serious physical injury. Review the warnings and labels for all ammunition and cleaning products carefully. Wash hands thoroughly after exposure.
- BEFORE HANDLING ANY FIREARM, UNDERSTAND ITS OPERATION.
  Not all firearms are the same. Familiarize yourself with the mechanical features of any firearm you intend to use. If you feel uncertain about any operational aspects of your handgun, please contact WALTHER ARMS, Inc. at 1-479-242-8500 before proceeding with its operation.

1 YOUR SAFETY RESPONSIBILITIES

- NEVER ALLOW A FIREARM TO BE USED BY INDIVIDUALS WHO DO NOT UNDERSTAND ITS SAFE OPERATION OR HAVE NOT READ THESE FIREARM SAFETY RULES.
- ALWAYS USE THE CORRECT AMMUNITION FOR YOUR PARTICULAR FIREARM as indicated by the marking on the barrel. Never use non-standard, reloaded, or "handloaded" ammunition which has not been subjected to internal ballistic pressure testing.
- BEWARE OF BARREL OBSTRUCTIONS. Be sure the barrel is clear of obstructions before shooting. Mud, water snow or other objects may inadvertently lodge in the barrel bore. A small obstruction can cause a dangerous increase in pressure and may damage your firearm and cause injury to yourself and others.
- BE SURE ALL ACCESSORIES, SUCH AS HOLSTERS AND GRIPS, ARE COMPATIBLE with the handgun and that the accessories do not interfere with safe operation.
- NEVER DISASSEMBLE YOUR HANDGUN beyond the field stripping procedure outlined in this manual. Improper disassembly or reassembly of your handgun may be dangerous and can lead to serious injury or death.
- NEVER MANIPULATE, ADJUST OR CHANGE ANY OF THE INTERNAL COMPONENTS OF YOUR FIREARM including the firing pin, sear, or drawbar.
  Improper manipulation of any internal component may affect the safety and reliability of your firearm and may cause serious injury or death.
- NEVER ALLOW ANY ALTERATION OR REPLACEMENT OF PARTS IN YOUR WALTHER FIREARM UNLESS PERFORMED BY A QUALIFIED GUNSMITH using genuine WALTHER parts. If you do otherwise, improper functioning of your firearm may occur and serious injury or death and damage to property may result.

⚠ WARNING SAFE USE OF A FIREARM IS YOUR PERSONAL RESPONSIBILITY AND THE FAILURE TO FOLLOW ALL OF THESE BASIC SAFETY RULES MAY RESULT IN SEVERE PERSONAL INJURY OR DEATH TO YOU OR OTHERS. YOU ARE THE MOST IMPORTANT SAFETY DEVICE WHEN IT COMES TO THE USE OF YOUR FIREARM AND WALTHER WILL NOT BE RESPONSIBLE FOR ANY PERSONAL INJURY, DEATH OR PROPERTY DAMAGE THAT RESULTS FROM:
(1) THE CRIMINAL OR NEGLIGENT USE OF THIS HANDGUN;
(2) A DISREGARD OF THESE SAFETY INSTRUCTIONS AND WARNINGS;
(3) IMPROPER OR CARELESS HANDLING OF THIS FIREARM;
(4) THE USE OF NON-STANDARD, DEFECTIVE, IMPROPER OR RELOADED AMMUNITION; OR
(5) IMPROPER OR NEGLIGENT MODIFICATIONS OR REPAIRS TO THE HANDGUN.

1.2 Safe Storage & Transportation

⚠ WARNING FIREARMS ARE DANGEROUS WHEN USED AND STORED IMPROPERLY – THEY POSE A RISK OF SERIOUS OR FATAL INJURIES.
FIREARMS CAN BE ESPECIALLY DANGEROUS TO CHILDREN WHEN THEY ARE STORED IN AN IRRESPONSIBLE AND UNSAFE MANNER.
FOR YOUR SAFETY AND THE SAFETY OF OTHERS, IT IS IMPERATIVE THAT YOU KEEP YOUR FIREARM LOCKED AND UNLOADED IN A SECURE PLACE.
THE AMMUNITION SHOULD BE STORED IN A SEPARATE, SECURE LOCATION WHEN IT IS NOT IN USE.
SAFE AND SECURE STORAGE OF YOUR FIREARM IS ONE OF THE MOST IMPORTANT RULES OF FIREARM SAFETY.
YOUR FAILURE TO FOLLOW THESE RULES MAY RESULT IN SERIOUS INJURY OR DEATH TO YOU OR OTHERS.

- ALWAYS SECURE YOUR FIREARM IN A MANNER THAT WILL PREVENT UNAUTHORIZED ACCESS.
- Whenever your firearm is not in use, keep it unloaded and locked. Your safety and the safety of others requires that you always secure and store your firearm in a manner that will prevent unauthorized access. Never leave a firearm unattended unless it is locked, unloaded and secured.
- ALWAYS USE THE LOCK PROVIDED BY WALTHER TO SECURE YOUR FIREARM.
- Please read and follow the instructions packaged separately for the use of this lock. A lock, when properly used, can be an effective tool in preventing unauthorized access to your firearm. There are other alternative locks and safe storage containers available in the marketplace which may also be appropriate for your particular needs.
- Consult your local gun shop, hardware store, or local police department for guidance on the variety of other safe storage devices or practices which may be appropriate for your particular needs. By purchasing this firearm you have accepted the responsibility of safely securing the firearm at all times and preventing its unauthorized use. Never assume that the use of this lock alone is sufficient to safely secure your firearm. It is your personal responsibility to select and use whatever measures or practices that will enable you to be absolutely certain that your firearm is secure at all times.

⚠ WARNING NEVER LOCK A LOADED FIREARM AND NEVER LOAD A LOCKED FIREARM.

- ALWAYS STORE YOUR FIREARM AND AMMUNITION SEPARATELY so that they are not accessible to children or other unauthorized persons. Safe and secure storage of your firearm and ammunition are your responsibility. It is a full-time responsibility.

- NEVER ASSUME THAT A "HIDING" PLACE IS A SECURE STORAGE METHOD.
  Others may be aware of your storage location or come upon it by chance. It is your personal responsibility to use common sense when storing your firearm and ammunition and to always make sure they are not accessible to children or other unauthorized persons.
- NEVER TRANSPORT A LOADED FIREARM.
  When transporting your firearm, be sure it is unloaded and locked. Safe and secure transportation of your firearm is your responsibility.
- ALWAYS FOLLOW THE LAW!
  Many jurisdictions have laws that make it a crime to keep a firearm unlocked and in an area accessible to children or others. Keeping a firearm locked and unloaded when not in use is not only common sense safety practice ... IT IS THE LAW. You must be familiar with all local, state, and federal laws regarding the safe storage and transportation of your firearm. Failure to know and follow the law may result in unauthorized access or use of your firearm by another. Obey all laws relating to the storage and transportation of firearms. Your local police department or gunshop can furnish you with available information on storing and/or transporting a firearm safely and legally.
- YOUR FIREARM IS YOUR RESPONSIBILITY.
  You must prevent your firearm from being stolen or from being used by untrained or unqualified individuals. Keep it locked, unloaded and secured when not in use.

2 AMMUNITION

⚠WARNING NEVER USE AMMUNITION NOT SPECIFICALLY DESIGNATED FOR USE IN YOUR FIREARM. FAILURE TO USE THE SPECIFIC CARTRIDGE INTENDED FOR USE IN THE CREED PISTOL MAY CAUSE THE PISTOL TO JAM, FAIL TO FIRE OR EVEN GENERATE EXCESSIVE GAS PRESSURE WHICH CAN DAMAGE OR DESTROY THE PISTOL, CAUSE PERSONAL INJURY, DEATH OR PROPERTY DAMAGE.

Locate the cartridge designation marked on the handgun. This information indicates the ammunition that must be used in this firearm (see 2 Fig. 1). You are responsible for selecting ammunition that meets industry standards and is appropriate in type and caliber for this firearm.

2 Fig. 1

Never use a cartridge not specifically designated for use in your firearm. Pressure from the wrong type of ammunition may exceed the capability of your firearm and may damage or even rupture your firearm.

Never mix ammunition.

In some cases, a round of ammunition not specified on your handgun may fit into the chamber. Firing ammunition not specified on your handgun may cause it to rupture and cause serious injury or death to you or others.

Always inspect your ammunition before using it. Never use dirty, corroded or damaged ammunition which can lead to a burst cartridge which may cause damage to the handgun and personal injury or death.

Use only commercially manufactured ammunition with internal ballistic pressures which are in strict accordance with the specifications of the Sporting Arms and Ammunition Manufacturers' Institute (SAAMI). If you are uncertain, contact your ammunition supplier for verification.

⚠WARNING NEVER USE NON-STANDARD, RELOADED OR "HAND-LOADED" AMMUNITION WHICH HAS NOT BEEN SUB-JECTED TO INTERNAL BALLISTIC PRESSURE TESTING.RELOADED OR HANDLOADED AMMUNITION, MAY HAVE MANY MANUFACTURING AND QUALITY VARIABLES (SUCH AS THE TYPE AND AMOUNT OF GUN POWDER). ANY AMMUNITION THAT IS IMPROPERLY MANUFACTURED, EVEN IN THE SLIGHTEST DEGREE, MAY FAIL TO FIRE OR MAY GENERATE EXCESSIVE INTERNAL PRESSURES WHICH CAN DAMAGE OR EVEN RUPTURE THE FIREARM, CAUSING PERSONAL INJURY OR DEATH TO THE SHOOTER OR THOSE IN THE IMMEDIATE VICINITY.

2 AMMUNITION

A firearm and ammunition are a system and must work together. Their performance is closely related. There are different types of ammunition for different types of firearms. Your firearm has been designed for ammunition of a specific type and a specific caliber. It is important to select the proper ammunition for your firearm.

Different combinations of bullet velocity, bullet weight and firearm weight can have major impact on felt recoil; high felt recoil can be uncomfortable to some shooters.

For example:

- Gun Weight: lower gun weight increases felt recoil.
- Bullet Weight: higher bullet weight increases felt recoil.
- Bullet Velocity: higher bullet velocity increases felt recoil.

To acclimate yourself to higher levels of felt recoil, consider the following:

- Use a firm two-hand hold on the grip when firing.
- Always start your shooting experience with the lowest bullet velocity and lowest bullet weight available for your firearm.
  Ask your firearm dealer to suggest the lowest power, lowest velocity, lightest bullet weight for your firearm.
- You can also consider changing your firearm's grip configuration/composition to better fit your hand's specific size and shape.

"Plus-P" (+P) ammunition generates pressures in excess of the pressures associated with standard ammunition. Such pressures may affect the wear characteristics of your CREED pistol or exceed the margin of safety. Use of "Plus-P" ammunition may result in the need for more frequent service.
"Plus-P-Plus" (+P+) ammunition must not be used in WALTHER firearms. This marking on the ammunition designates that it exceeds established industry standards, but the designation does not represent defined pressure limits and therefore such ammunition may vary significantly as to the pressures generated.

Some brands of ammunition may cause difficulty in extracting spent cartridge cases from the chamber. If this situation occurs, thoroughly clean the chamber with solvent. If this condition persists, we recommend changing to another brand of ammunition.

3 PRODUCT DESCRIPTION

3.1 Main Features

The CREED is a hammer fired semi-automatic pistol with constant trigger pull. The CREED features a loaded chamber viewport, along with automatic internal safeties. The open post sights of the CREED are designed for rapid aiming and target acquisition.
The frame is made from high-strength polymer and has a MIL-STD-1913 (Picatinny) accessory mounting rail for lights, lasers or other tactical devices. The thumb-operated magazine release button, conveniently located on the frame, is reversible for either left- or right-hand use.

3.2 Functional Elements, Model Number Identification

1 Slide
2 Front Sight
3 Barrel
4 Slide Stop Notch
5 Slide Serrations
6 Slide Stop Lever
7 Rear Sight
8 Magazine
9 Grip
10 Magazine Release (reversible)
11 Trigger
12 Trigger Guard
13 Take Down Lever
14 Frame
15 Accessory Rail
16 Muzzle

1 MODEL
2 Lanyard Loop
3 Ejection Port
4 SERIAL NUMBER
5 Loaded Chamber Viewport

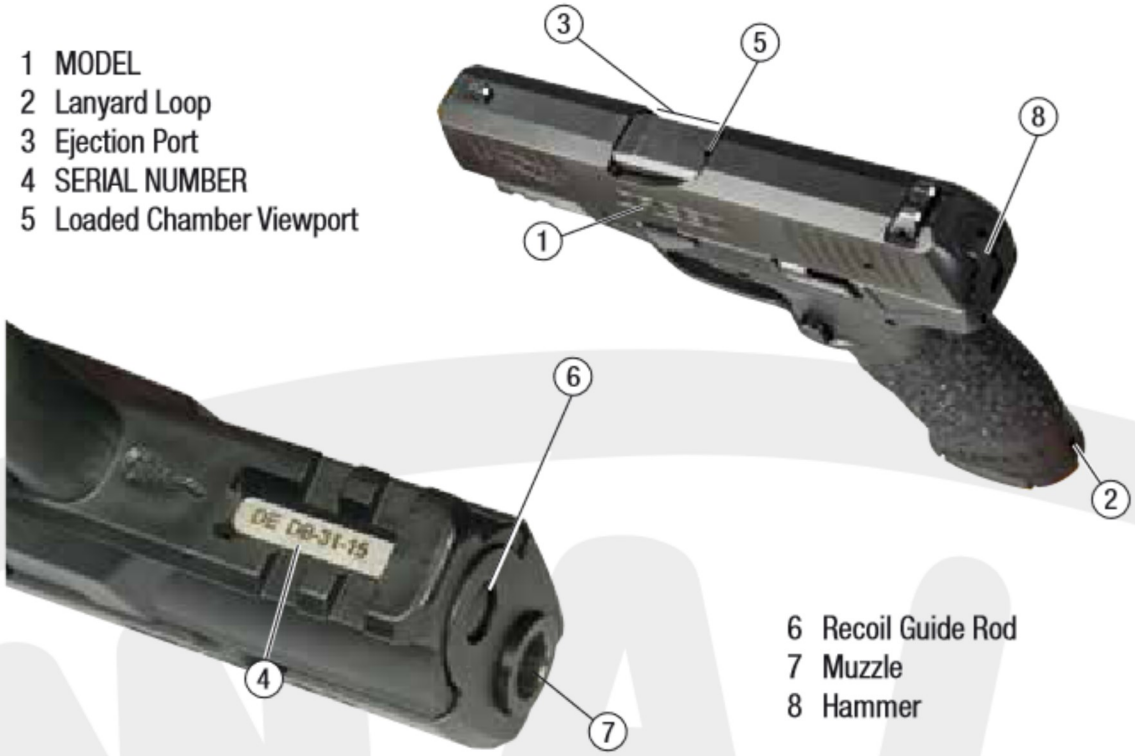

6 Recoil Guide Rod
7 Muzzle
8 Hammer

3.2.1 Loaded Chamber Viewport

The CREED comes with a loaded chamber viewport (3.2.1 Fig. 1). This viewport can be observed by looking at the top of the ejection port, noting an opening at the rear of the barrel hood. By looking into this opening, you can observe whether or not a round is in the barrel's chamber. If a round is in the chamber, you should be able to see the actual cartridge rim through this opening.

3.2.1 Fig. 1

⚠WARNING DO NOT RELY UPON THE LOADED CHAMBER VIEWPORT TO VERIFY THE PRESENCE OR ABSENCE OF A ROUND IN THE CHAMBER. ALWAYS CHECK THE CHAMBER OF THE FIREARM BY REMOVING THE MAGAZINE AND LOCKING THE SLIDE IN THE OPEN POSITION.

⚠WARNING ALWAYS TREAT EVERY FIREARM AS IF IT WERE LOADED AND WOULD FIRE IF THE TRIGGER IS PULLED: A LOADED CHAMBER VIEWPORT MAY HELP DETERMINE WHETHER THE CHAMBER IS LOADED OR UNLOADED. THE AMOUNT OF LIGHT, CLEANLINESS OF THE PISTOL, DISCOLORATION OF THE AMMUNITION AND OTHER FACTORS MAY LIMIT THE EFFECTIVENESS OF THE LOADED CHAMBER VIEWPORT. AFTER FIRST CHECKING THAT THE MAGAZINE HAS BEEN REMOVED, PULL THE SLIDE BACK UNTIL YOU CAN LOOK INTO THE CHAMBER AND VERIFY WHETHER IT IS EMPTY OR NOT.

3.2.2 Magazine Release

The magazine release is on the side of the grip.

Removing the magazine:
Grasp the pistol with your finger off the trigger and outside the trigger guard. Depress the magazine release and remove the magazine (3.2.2 Fig. 1).

3.2.2 Fig. 1

3.2.3 Slide Stop

Locking the slide in the "open" position:
Grasping the grip of the frame and with your finger off the trigger and outside the trigger guard, depress the magazine release, and completely remove the magazine. Firmly grasp the serrated sides of the slide from the rear with the thumb and fingers. While steadily holding the grip, briskly pull the slide fully rearward to extract any cartridge from the chamber and clear it from the pistol.
To lock the slide in the open position, allow the slide to move slightly forward from the rearmost position while pressing upward on the slide stop (3.2.3 Fig. 1).

3.2.3 Fig. 1

Releasing the slide from the slide stop:
Press down on the slide stop to release the slide and allow it to move fully forward. For easier operation of the slide stop, grasp the serrated sides of the slide from the rear and pull the slide fully to the rear while pressing down on the slide stop and then release the slide from your grasp to allow it to move fully forward.

3.2.4 Magazine

When the magazine is removed from the magazine well in the grip, the number of rounds can be seen in the witness holes (3.2.4 Fig. 1).

3.2.4 Fig. 1

4 PREPARATION FOR FIRING

⚠WARNING THE FAILURE TO FOLLOW THESE FIREARM SAFETY REQUIREMENTS MAY CAUSE SERIOUS PERSONAL INJURY OR DEATH TO YOU OR OTHERS.

- ALWAYS TREAT ALL HANDGUNS AS IF THEY ARE LOADED.
- ALWAYS BE SURE THAT ALL ACTIONS OF FIREARMS ARE OPEN, THAT CHAMBERS ARE CLEAR OF CARTRIDGES, MAGAZINES ARE REMOVED, AND THAT FIREARMS ARE POINTING IN A SAFE DIRECTION.
- ALWAYS KEEP FINGERS AND OTHER PARTS OF YOUR BODY AWAY FROM THE MUZZLE, AND AWAY FROM THE PISTOL SLIDE AND EJECTION PORT.
- ALWAYS WEAR ADEQUATE AND PROPER EAR PROTECTORS SPECIFIED FOR FIREARM USE to prevent permanent damage to your hearing. Make sure others who are nearby are wearing ear protection as well.
- ALWAYS WEAR SAFETY GLASSES SPECIFIED FOR FIREARM USE, whether indoors or out. Safety glasses should protect your eyes from the firing flash and particles associated with the discharge of ammunition. Failure to do so creates a risk of personal injury from particle or debris spitting or ricochets.
- ALWAYS BE ALERT AND ALWAYS FOLLOW THE SAFETY INSTRUCTIONS OF THE RANGE OFFICER. Never shoot if you are tired, cold or impaired in any way.
- ALWAYS BE AWARE OF OTHER PEOPLE so that persons cannot accidentally walk into the line of fire.
- THE SHOOTER (AND ALL OTHERS IN THE SHOOTING AREA) MUST ALWAYS BE IN A POSITION THAT IS OUT OF THE LINE OF FIRE and are not within an area where they may be struck by ricochets, or particles spitting from the firearm, or by ejected cases.
- NEVER SHOOT AT HARD SURFACES, WATER OR RANDOMLY INTO THE SKY.
  Always select a place to shoot that has a safe backstop and is free from obstructions and water surfaces which cause ricochets.
- NEVER USE ALCOHOL OR DRUGS BEFORE OR WHILE SHOOTING OR HANDLING OF ANY FIREARM.

4.1 Inspecting the Pistol

- When you inspect the pistol, you should first check to ensure that it is unloaded. To do this, grasp the grip of the frame with your finger off the trigger and outside the trigger guard, point the muzzle in a safe direction, depress the magazine release and remove the magazine (4.1 Fig. 1).
- Point the muzzle in a safe direction, grasp the serrated sides of the slide from the rear with the thumb and fingers as shown in 4.1 Fig. 2, and briskly draw the slide fully rearward in order to extract any cartridge from the chamber and clear it from the pistol. Do not obstruct the ejection port because doing so can interfere with the proper ejection of a cartridge.
- Lock the slide in the open position by allowing the slide to move slightly forward from the rearmost position while pressing upward on the slide stop (4.1 Fig. 3).
- Check the chamber to verify that it is unloaded and check the bore visually that it is clean, dry, and free from any obstructions (4.1 Fig. 4).
- Examine the breech face. If the firing pin is protruding do not attempt to load the firearm. Take the gun to a certified WALTHER gunsmith or call the WALTHER ARMS, Inc. service department at 1-479-242-8500.
- You must follow this procedure every time a firearm leaves your hand, is cleaned, handed to you or another person, transported or stored.

4.1 Fig. 1

4.1 Fig. 2

4.1 Fig. 3

4.1 Fig. 4

⚠WARNING NEVER RELY ON MECHANICAL FEATURES ALONE. PROPER HANDLING OF THE FIREARM WILL ENSURE THE SAFETY OF YOU AND OTHERS. FIREARM SAFETY IS ALWAYS YOUR RESPONSIBILITY.

4.2 Loading

- Do not load the pistol until you have read and fully understand this manual.
- Do not load the pistol until you are ready to use it. Keep your finger off the trigger and outside the trigger guard until you are ready to fire.
- Never load your pistol until you are sure of your target, what is beyond it and are fully prepared to fire.
- WALTHER has provided you with a magazine designed to operate in your specific model of pistol. While your magazine may be able to be inserted into another model pistol, it will only function properly in the specific model for which it was designed. Do not interchange magazines from one model pistol to another model pistol.
- Follow instructions in this manual and any other specific instructions which may be marked onto, or accompany, a magazine. Failure to use the particular type of WALTHER magazine specified for your model and caliber of pistol may result in a malfunction.

4.2.1 Loading the Magazine

When the magazine is removed from the magazine well in the grip, the number of rounds can be seen in the witness holes (4.2.1 Fig. 1).

4.2.1 Fig. 1

⚠WARNING DO NOT ATTEMPT TO LOAD THE MAGAZINE WITH MORE THAN THE SPECIFIED NUMBER OF CARTRIDGES BECAUSE DOING SO MAY CAUSE A FAILURE TO FEED A ROUND OF AMMUNITION INTO THE CHAMBER. DO NOT USE EXCESSIVE FORCE WHEN LOADING THE MAGAZINE, AS THIS MAY DAMAGE THE MAGAZINE. DAMAGED OR DEFECTIVE MAGAZINES CAUSE MALFUNCTIONS AND MAY CAUSE IMPROPER FUNCTIONING OF THE PISTOL.

Load the magazine by pressing a cartridge base (rear of cartridge) downward on the forward portion of the magazine follower (or downward on the case of a previously loaded cartridge) and sliding the cartridge fully under the lips of the magazine until the cartridge base is against the rear wall of the magazine. Repeat the procedure for the number of cartridges you wish to load, up to the magazine capacity (4.2.1 Fig. 2).

4.2.1 Fig. 2

4.2.2 Loading the Pistol

- Inspect the pistol as shown in section 4.1
- Grasp the pistol with your finger off the trigger and outside the trigger guard, point the muzzle in a safe direction. Insert the loaded magazine into the magazine well of the pistol until it is locked in place.
  To make sure that the magazine is fully and securely inserted, try pulling down on the exposed portion of the magazine floorplate. It should not move.

⚠ CAUTION Visually check the breech face. If the firing pin is protruding do not attempt to use the firearm. Take it to an authorized WALTHER ARMS, Inc. warranty center.

⚠ WARNING DO NOT USE EXCESSIVE UPWARD FORCE WHEN INSERTING A LOADED MAGAZINE INTO THE PISTOL. EXCESSIVE UPWARD FORCE COULD CAUSE THE SLIDE TO MOVE FORWARD, CHAMBERING A ROUND AND MAKING THE PISTOL READY TO FIRE.

- Pull the slide fully to the rear and let go allowing it to move fully forward. This strips a cartridge from the magazine and seats it in the chamber of the barrel.

⚠ WARNING UPON FIRING THE PISTOL OR RELEASING THE SLIDE FROM THE SLIDE STOP, THE SLIDE MOVES REARWARD OR FORWARD WITH SIGNIFICANT FORCE AND SPEED. TO AVOID INJURY, BE SURE NO PART OF YOUR BODY IS IN THE PATH OF THE SLIDE'S TRAVEL.

⚠ WARNING IF THE CARTRIDGE FAILS TO STRIP FROM THE MAGAZINE OR FULLY SEAT INTO THE CHAMBER, IMMEDIATELY STOP THE LOADING PROCESS. REMOVE THE MAGAZINE, LOCK THE SLIDE OPEN AND VERIFY THAT THE CHAMBER IS EMPTY. REFER TO THE "INSPECTING THE PISTOL" SECTION OF THIS MANUAL.

⚠ WARNING ALWAYS LOAD A ROUND INTO THE CHAMBER BY FEEDING IT FROM THE MAGAZINE. NEVER ATTEMPT TO LOAD THE PISTOL BY INSERTING A ROUND INTO THE CHAMBER VIA THE OPEN EJECTION PORT. FAILURE TO FOLLOW THIS WARNING MAY RESULT IN SEVERE INJURY OR DEATH TO YOU OR OTHERS.

⚠ CAUTION The pistol is now loaded and ready to fire. The pistol and its magazine are now loaded and will fire when the trigger is squeezed. Remember to keep the muzzle pointed in a safe direction under all conditions and always keep your finger or any other object off the trigger and outside the trigger guard until you decide to fire the pistol. Never leave a loaded firearm unattended or out of your direct control.

- If you wish to restore the magazine in your pistol to its full capacity, depress the magazine release and remove the magazine from the pistol. Remember that there is a round in the chamber; therefore, the firearm should be holstered or safely secured during this process without touching the trigger. Load one cartridge into the magazine to replace the one which was chambered when you allowed the slide to carry forward.
- Re-insert the loaded magazine into the magazine well of the pistol until it is locked in place. To make sure that the magazine is again fully and securely inserted, apply some removal pressure to the exposed portion of the magazine butt plate.

⚠ CAUTION Your pistol and magazine are now fully loaded and ready to fire when the trigger is pulled. Remember to keep your pistol pointed in a safe direction under all conditions and always keep your finger or any other object off the trigger and outside the trigger guard until you have made the commitment to fire the handgun. Never leave a loaded firearm out of your direct control.

⚠ CAUTION After inserting a magazine, always test to make sure it is locked in place by applying some removal pressure to the exposed portion of the butt plate.

⚠ WARNING THE CREED IS NOT EQUIPPED WITH A MAGAZINE DISCONNECT FEATURE. THE CREED WILL FIRE WITH THE MAGAZINE REMOVED FROM THE PISTOL.

4.3 Firing the CREED

⚠ WARNING ALWAYS KEEP THE MUZZLE POINTED IN A SAFE DIRECTION.

⚠ WARNING WEAR EYE AND EAR PROTECTION SPECIFIED FOR FIREARM USE EVERY TIME YOU DISCHARGE YOUR FIREARM. MAKE SURE OTHERS IN THE VICINITY OF WHERE YOU WILL BE SHOOTING DO SO AS WELL.

⚠ WARNING "STAGING" THE TRIGGER VIOLATES A BASIC RULE OF FIREARM SAFETY WHICH WARNS YOU TO KEEP YOUR FINGER OUT OF THE TRIGGER GUARD UNTIL YOU HAVE MADE THE COMMITMENT TO FIRE. "STAGING" CREATES A SERIOUS RISK OF PERSONAL INJURY OR DEATH SINCE IT MAY LEAD TO AN UNINTENTIONAL DISCHARGE.

- It has come to our attention that some users of WALTHER handguns may stage the trigger in anticipation of firing a shot. Staging is the act of pulling the trigger rearward toward – stopping just short of – the point where the handgun fires. Such manipulation of the trigger can reduce the user's control of the handgun and can result in an unintentional discharge. Furthermore if the user decides not to fire, release of the trigger from a position close to the firing point in the staging process could result in an unintentional discharge.
- How a handgun is gripped affects recoil and trigger control. Always ensure that you maintain a firm grip and proper alignment of the pistol. The design of the CREED frame offers a high degree of control permitting the shooter to obtain an elevated grip closer to the pistol's bore axis.
- Keep the muzzle pointed in a safe direction and your finger outside the trigger guard until you are ready to fire.
- With a firm grip, allow your finger to be placed squarely across the face of the trigger. Squeeze the trigger fully to the rear. As the trigger is drawn fully to the rear, the hammer is released, striking the cartridge primer. Upon firing, the slide moves rearward thereby extracting and ejecting the spent cartridge case. The slide then returns forward feeding the next cartridge from the magazine into the chamber.
- After firing, you must allow the trigger to move fully forward before you can fire the next shot. Failure to do so will prevent the lockwork from fully cycling and will prevent you from being able to fire the next shot. Keep your finger off the trigger and outside the trigger guard until you are ready to fire again. This sequence can be repeated until the last round has been fired. Trigger pull and trigger travel is the same from the first to the last round.
- Once the last round has been fired, the magazine follower exerts upward pressure on the slide stop causing it to engage the slide and to hold it in the "open" position.

4.4 Exchanging Magazines

Once the last round has been fired, the magazine follower exerts upward pressure on the slide stop causing it to engage the slide stop notch thereby holding it in the "open" position.

- Be certain the chamber is empty.
- Depress the magazine release and remove the magazine.
- To continue shooting, insert another loaded magazine.
- Pull the slide fully to the rear, let it go and allow it to run fully forward.

⚠WARNING WEAR EYE AND EAR PROTECTION SPECIFIED FOR FIREARM USE EVERY TIME YOU DISCHARGE YOUR FIREARM. MAKE SURE OTHERS IN THE VICINITY OF WHERE YOU WILL BE SHOOTING DO SO AS WELL.

⚠ CAUTION After inserting a magazine, always test to make sure it is locked in place by applying some removal pressure to the exposed portion of the butt plate.

⚠WARNING UPON FIRING THE PISTOL OR RELEASING THE SLIDE FROM THE SLIDE STOP, THE SLIDE MOVES REARWARD OR FORWARD WITH SIGNIFICANT FORCE AND SPEED. TO AVOID INJURY, BE SURE NO PART OF YOUR BODY IS IN THE PATH OF THE SLIDE'S TRAVEL.

4.5 Unloading the Pistol

⚠WARNING THE CREED PISTOL IS NOT EQUIPPED WITH A MAGAZINE DISCONNECT FEATURE. THE CREED PISTOL WILL FIRE WITH THE MAGAZINE REMOVED FROM THE PISTOL.

- Point the muzzle in a safe direction. Make sure your finger is off the trigger and out of the trigger guard. Depress the magazine release and remove the magazine (4.5 Fig. 1).

4.5 Fig. 1

- Keep the muzzle pointed in a safe direction, and keep your finger off the trigger and outside the trigger guard. Grasp the serrated sides of the slide from the rear with the thumb and fingers (4.5 Fig. 2), and briskly draw the slide fully rearward in order to extract any cartridge from the chamber and clear it from the pistol. Do not obstruct the ejection port because doing so can interfere with proper ejection of a cartridge.

4.5 Fig. 2

- Lock the slide in the open position by allowing the slide to move slightly forward from the rearmost position while pressing upward on the slide stop (4.5 Fig. 3).

4.5 Fig. 3

- Visually check the barrel chamber to be sure it is empty (4.5 Fig. 4). Look into the chamber and down through the magazine well. Verify that no ammunition remains in the pistol. Check the bore visually for any obstructions.

4.5 Fig. 4

- Visually check the breech face. If the firing pin is protruding do not attempt to use the firearm. Take it to an authorized WALTHER ARMS gunsmith.

- Unload the magazine by holding it with the bullet end of the cartridge pointing away from you and pressing each cartridge forward and out of the magazine.

⚠ WARNING ANY TIME YOU RELEASE THE SLIDE WHILE A MAGAZINE CONTAINING CARTRIDGES IS IN THE PISTOL, YOU WILL HAVE CHAMBERED A NEW ROUND IN THE PISTOL. THE PISTOL WILL BE READY TO FIRE.

4.6 Clearing Misfires

⚠WARNING IF YOUR FIREARM GIVES ANY INDICATION THAT IT IS NOT PERFORMING PROPERLY OR THE OPERATION OF YOUR FIREARM HAS CHANGED "THE WAY IT FEELS OR SOUNDS", STOP FIRING. MAKE SURE THE FIREARM IS POINTED IN A SAFE DIRECTION, UNLOAD THE FIREARM AND HAVE IT INSPECTED AND TEST-FIRED BY A GUNSMITH QUALIFIED TO PERFORM SERVICE ON WALTHER FIREARMS.

- If a cartridge fails to fire, wait ten (10) seconds while keeping the muzzle pointed in a safe direction.
- Keep your finger off the trigger and out of the trigger guard.
- Remove the magazine.
- Grasp the serrated sides of the slide from the rear and briskly pull the slide fully rearward to eject the misfired round. Do not obstruct the ejection port, and do not attempt to catch the round by placing your hand over the ejection port. Also remember that any time you release the slide while a magazine containing cartridges is in the pistol, you will have reloaded the chamber.
- In order to lock the slide in the open position, allow the slide to move slightly forward from the rearmost position while pressing upward on the slide stop.
- Check the barrel chamber and bore visually for any obstructions. You must be certain there are no cartridges in the chamber or obstructions in the barrel. If there are any obstructions in the bore of the barrel have the pistol further examined and repaired by a qualified gunsmith before using again.

⚠WARNING The CREED CAN BE FIRED WITH THE MAGAZINE REMOVED. BEFORE YOU OPERATE YOUR WALTHER PISTOL PLEASE FAMILIARIZE YOURSELF WITH ITS FEATURES.

5 FIELD-STRIPPING, CLEANING, LUBRICATION & MAINTENANCE

⚠WARNING ALWAYS KEEP THE BARREL POINTED IN A SAFE DIRECTION.

⚠WARNING ALWAYS FOLLOW THE FIELD STRIPPING INSTRUCTIONS EXACTLY. NEVER DO ANYTHING BEYOND WHAT YOU ARE SPECIFICALLY INSTRUCTED TO DO IN THIS MANUAL. NEVER ALTER OR MODIFY THE PARTS IN YOUR PISTOL.

⚠WARNING WEAR SAFETY GLASSES EVERY TIME YOU ASSEMBLE OR DISASSEMBLE YOUR FIREARM.

⚠WARNING DO NOT ALTER, MODIFY OR REPLACE ANY OF THE PARTS OF YOUR FIREARM UNLESS THIS WORK IS PERFORMED BY A QUALIFIED GUNSMITH USING GENUINE WALTHER PARTS. IF YOU DO OTHERWISE, IMPROPER FUNCTIONING MAY OCCUR AND SERIOUS INJURY, DEATH OR DAMAGE TO PROPERTY MAY RESULT.

⚠WARNING NEVER DISASSEMBLE YOUR HANDGUN BEYOND THE FIELD STRIPPING PROCESS OUTLINED IN THIS MANUAL. NEVER MANIPULATE ANY INTERNAL COMPONENTS BEYOND WHAT YOU ARE SPECIFICALLY INSTRUCTED TO DO IN THIS MANUAL SINCE THIS MAY AFFECT THE RELIABILITY, FUNCTIONING AND SAFETY OF YOUR HANDGUN.

5.1 Main Components

5.1.1 Field-Stripping Disassembly

- Point the pistol in a safe direction. Make sure your finger is off the trigger and out of the trigger guard. Depress the magazine release and remove the magazine (5.1.1 Fig. 1).

5.1.1 Fig. 1

- With the muzzle pointing in a safe direction, and with your finger off the trigger and outside the trigger guard, grasp the serrated sides of the slide from the rear with the thumb and fingers (5.1.1 Fig. 2), and briskly draw the slide fully rearward in order to extract any cartridge from the barrel chamber and clear it from the pistol.

5.1.1 Fig. 2

- Pull the slide fully to the rear, press upward on the slide stop lever while letting the slide move slightly forward thereby locking the slide open (5.1.1 Fig. 3). Look into the chamber and down through the magazine well. Verify that no ammunition remains in the pistol (5.1.1 Fig. 4).

5.1.1 Fig. 3

- Rotate the take down lever clockwise (downwards) until it stops (5.1.1 Fig. 5).

5.1.1 Fig. 4

- Grasp the slide from the top and remove the slide from the frame by pulling it slightly rearward then forward while being careful to retain the recoil guide rod assembly (5.1.1 Fig. 6).

- Remove the recoil guide rod assembly from below the barrel while compressing the spring (5.1.1 Fig. 7).

5.1.1 Fig. 5

- Remove the barrel from the slide.

- The main components of the pistol are shown in 5.1.1 Fig. 8.

5.1.1 Fig. 6

5.1.1 Fig. 7

5.1.1 Fig. 8

5.1.2 Field-Stripping Reassembly

⚠WARNING ALWAYS FOLLOW THE FIELD STRIPPING INSTRUCTIONS EXACTLY. NEVER DO ANYTHING BEYOND WHAT YOU ARE SPECIFICALLY INSTRUCTED TO DO IN THIS MANUAL. NEVER ALTER OR MODIFY THE PARTS IN YOUR PISTOL.

⚠WARNING WEAR SAFETY GLASSES EVERY TIME YOU ASSEMBLE OR DISASSEMBLE YOUR FIREARM.

- Hold the slide upside-down. Place the barrel inside the slide with the locking lugs oriented as shown in 5.1.2 Fig. 1.

5.1.2 Fig. 1

- Insert the recoil guide rod assembly:
  Place the smaller end of the recoil rod into the spring mounting at the front of the slide, and then insert the large polymer end of the recoil spring into the lower barrel recess, while compressing the spring (5.1.2 Fig. 1 and 2).

5.1.2 Fig. 2

Note: It is normal for the recoil guide rod assembly to flex when it is installed.

- Holding the slide in one hand and the frame – with the takedown lever rotated down – in the other hand, push the slide from the front into the slide guides of the frame (4.1.2 Fig. 3). Continue moving the slide onto the frame, making sure that the slide also engages the rear slide guides of the frame.

5.1.2 Fig. 3

- Pull the slide back until it is fully rearward, press upward on the slide stop lever while letting the slide move slightly forward thereby locking the slide open (4.1.2 Fig. 4).

5.1.2 Fig. 4

- Rotate the take down lever fully upward (5.1.2 Fig. 5). Grasp the slide from the top, pull it fully to the rear and guide the slide forward to its closed position.

5.1.2 Fig. 5

⚠WARNING ALWAYS CHECK THAT THE TAKE DOWN LEVER IS IN ITS HORIZONTAL POSITION PRIOR TO GUIDING THE SLIDE FORWARD TO ITS CLOSED POSITION. FAILURE IN CHECKING THIS MAY CAUSE THE SLIDE TO GET SEPARATED FROM THE FRAME AND RESULT IN DAMAGE OR MAY CAUSE INJURY.

5.2 Magazine

⚠WARNING WEAR SAFETY GLASSES EVERY TIME YOU ASSEMBLE OR DISASSEMBLE YOUR MAGAZINE.

5.2.1 Magazine Disassembly

⚠WARNING THE MAGAZINE SPRING IS UNDER PRESSURE. USE CAUTION WHEN STRIPPING DOWN THE MAGAZINE. CONTROL THE FLOORPLATE CATCH AND THE MAGAZINE SPRING WHILE YOU REMOVE THE FLOORPLATE SO THAT THEY DO NOT FLY OUT AND CAUSE INJURY.

1. Using a .15" (4 mm) punch, depress the floorplate catch through the hole in the floorplate (5.2.1 Fig. 1).

5.2.1 Fig. 1

2. Slide the floorplate forward off of the magazine tube while continuing to depress the floorplate catch in the tube.

3. Remove the floorplate catch and spring carefully from the magazine tube through the bottom of the tube.

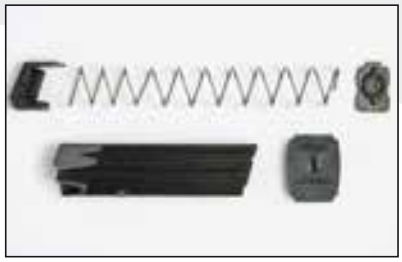

5.2.2 Fig. 1

4. Turn the tube right side up and remove the follower through the bottom of the tube.

5.2.2 Magazine Reassembly

1. Install the follower and magazine spring plus floorplate catch in reverse order back into the tube in exactly the same orientation as they were in when they were first removed during disassembly (5.2.2 Fig. 1, 2 and 3). Never use excessive force when assembling the magazine.

5.2.2 Fig. 2

2. While holding the floorplate catch in the tube, slide the floorplate onto the tube so that the projection of the floorplate catch engages the hole in the floorplate. There will be an audible “snap” heard.

5.2.2 Fig. 3

5.3 Cleaning the Pistol

Your firearm is a precision instrument. To ensure the reliable function of the pistol, it is necessary to establish routine maintenance procedures.

⚠ WARNING CHECK THAT THE PISTOL IS UNLOADED (MAGAZINE REMOVED FROM PISTOL AND CHAMBER CLEAR). ALSO ENSURE THAT THE MAGAZINE IS UNLOADED.

After each use of the pistol or after being subjected to extreme weather conditions, the pistol should be cleaned and lubricated. Also, before using the pistol for the first time, it should be examined and cleaned. The pistol has been treated with either a preservative or oil to protect it against corrosion. Before using it, all excess oil should be wiped from the bore, chamber, and exposed areas using a clean swab or patch.

Field-strip the pistol as previously described. Starting with the barrel and from chamber end, insert a brush through the bore of the barrel until the bristles completely exit at muzzle end. Pull the brush back until the bristles completely exit at chamber end. Use a good powder-removing solvent and brass bristle bore brush to remove lead and firing residue from the interior of the barrel. Wipe the areas clean with patches or a swab.

Using a small brush dipped in solvent, remove all deposits from around the breech face, chamber end of the barrel, extractor and adjacent areas which have been exposed to powder or primer residue. Remove any residue on the frame with light brushing and a solvent. After cleaning, apply a light film of high quality gun lubricant to all external metal surfaces and wipe clean.

If the pistol will be used or stored in a cold climate, be sure to use appropriate lubricant that will not congeal at low temperatures.

⚠ WARNING NEVER MANIPULATE, ADJUST OR CHANGE ANY OF THE INTERNAL COMPONENTS OF YOUR FIREARM UNLESS SPECIFICALLY DIRECTED TO DO SO IN THIS MANUAL. IMPROPER MANIPULATION OF ANY INTERNAL COMPONENT MAY AFFECT THE SAFETY AND RELIABILITY OF YOUR FIREARM AND MAY CAUSE SERIOUS INJURY, DEATH, OR DAMAGE TO PROPERTY.

⚠ WARNING ANY MAINTENANCE OR SERVICE NOT SPECIFIED IN THIS MANUAL MUST BE PERFORMED BY A QUALIFIED GUNSMITH USING GENUINE WALTHER PARTS. IF YOU DO OTHERWISE, IMPROPER FUNCTIONING OF YOUR FIREARM MAY OCCUR AND SERIOUS INJURY OR DEATH OR DAMAGE TO PROPERTY MAY RESULT.

⚠ CAUTION Always follow the instructions provided with the gun cleaner and gun lubricant. Some cleaners can cause damage to the pistol. You should avoid prolonged solvent immersion and prolonged ultrasonic cleaning of the pistol (maximum temperature for ultrasonic cleaning: 122 °F (50 °C)).
Choice of solvent should be restricted to those products specifically developed for firearms maintenance. Damage to a firearm's finish may occur if these warnings are ignored.
Ammonia based solvents or other strong alkaline solvents, should not be used on any WALTHER firearm.

5.4 Lubrication

After cleaning the entire pistol, use a cloth to apply a light film of high quality gun lubricant to all external metal surfaces and wipe clean.
Do not over-lubricate the pistol to the extent where lubricant will be dripping or running down the handgun. Excess lubricant can attract dirt, unburned powder and carbon residue, which can interfere with proper functioning of the pistol.

- Barrel:
  Use a cloth to apply a light film of high quality gun lubricant to all external surfaces (A) and the ramp (B) where the locking block cams the barrel.
- Frame:
  A light coat of high quality gun lubricant should be applied to the mechanism.
  Put only one drop of lubricant on the slide guides (C), and front end (D) and rear end (E) of the trigger bar.
- Slide:
  Put only one drop of lubricant on the safety plunger (F), the disconnector cut (G), and the stripper rail (H).
- Magazine:
  Apply a light film of high quality gun lubricant to all external metal surfaces.

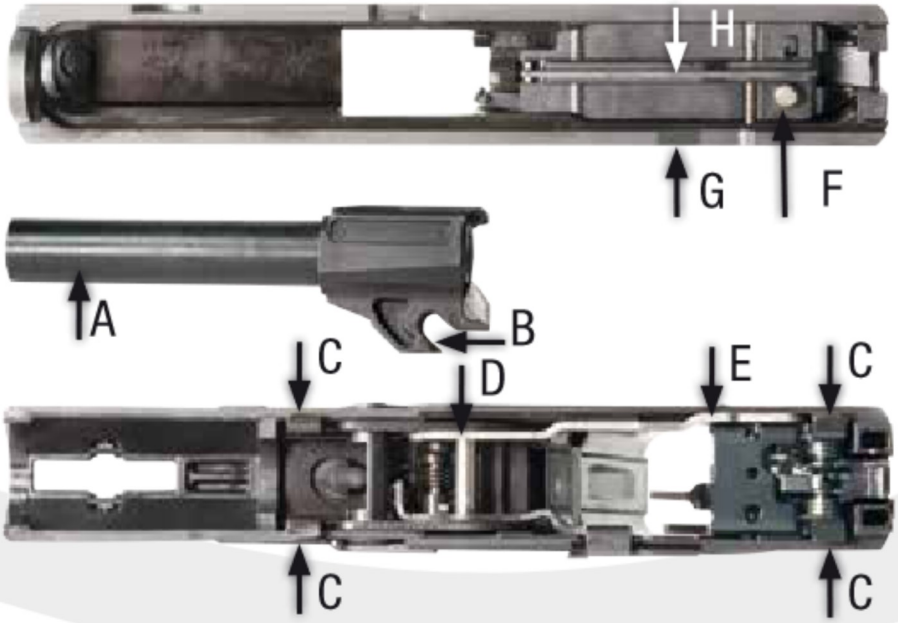

5.4 Fig. 1

5.5 Maintenance Before Storing

Obey all laws and regulations relating to the storage of firearms. You must familiarize yourself with all local, state, and federal laws regarding the safe storage of firearms and ammunition.
When storing the pistol, do not encase the firearm in anything that will attract or hold moisture, such as leather or heavy cloth. If the firearm is to be stored for an extended period, the bore, chamber and internal working mechanism should be lubricated with a high quality lubricant or preservative intended for firearms. The external working mechanisms, slide, barrel, and magazine should be coated with anti-corrosion lubrication.

Before using the pistol again, be sure to clean it. Every time you clean the firearm, check it for signs of wear. If wear is noted, do not use the firearm. Return it to WALTHER for service or have it checked by a qualified gunsmith.

6 ADJUSTING THE PISTOL TO ITS USER

⚠WARNING MAKE SURE THE HANDGUN IS UNLOADED BEFORE MAKING ANY ADJUSTMENTS.

6.1 Magazine Release

The magazine release is reversible. In case you wish to reverse it, a 0.04" (1 mm) drift and a small screwdriver (0.1" (2.5 mm)) is needed to do so.

1. Keep the magazine release pressed. By doing so, the magazine release moves out on the opposite side, revealing a small cut out on the side of the button. Press a 0.1" (2.5 mm) screwdriver into this slot and slowly release the magazine release (6.1 Fig. 1). While holding the screw driver into position insert a 0.04" (1 mm) drift into the hole on the opposite side of the magazine release and firmly press the drift into the hole and lift upwards on the screw driver (6.1 Fig. 2, the individual parts are shown in 6.1 Fig. 3).
2. Remove the magazine release (6.1 Fig. 4) and the compression spring from the opposite side.
3. Insert the compression spring on the side you wish to have the magazine release (6.1 Fig. 5).
4. Insert the magazine release over the spring (6.1 Fig. 6).
5. While pressing the magazine release, insert the keeper from the opposite side. Press in the keeper until an audible "snap" is heard (6.1 Fig. 7 and 8).

6.1 Fig. 1

6.1 Fig. 2

6.1 Fig. 3

6.1 Fig. 4

6.1 Fig. 5

6.1 Fig. 6

6.1 Fig. 7

6.1 Fig. 8

6.2 Lanyard Loop

An eyelet (6.2 Fig. 1) for attachment of a lanyard is found at the lower end of the grip.

6.2 Fig. 1

6.3 Sights

The front and rear sight are replaceable. The point of impact is adjustable for windage and elevation.

WINDAGE

Windage adjustments are made by drifting the steel rear sight from side to side.
Field-strip the pistol as described in section 5.1.
To adjust, move the rear sight in the direction you wish the group to move on the target. For example: if the group should move to the right, move the rear sight to the right.

6.3 Fig. 1

⚠ CAUTION

The standard WALTHER Steel Rear Sight (6.3 Fig. 1) will fit very tightly into the slot cut in the slide. DO NOT REMOVE THE SLEEVE BELOW THE STEEL REAR SIGHT.

ELEVATION

Elevation adjustments are made by using front sights of varying height. Steel Front Sights of varying height are an accessory item.
If the shots group low, use a lower front sight. For high grouping, use a higher one.
The front sights are numbered. The higher the number, the higher the front sight. Each stage results in a correction of the impact by about 2" (5 cm) over a 25 yards (25 m) distance from target. To change the front sight, field-strip the pistol as described in section 5.1.

Remove the front sight screw (6.3 Fig. 2) using a screwdriver and press the front sight upwards and out. Assembly is in reverse order. Remember to make sure the screw and the thread inside the steel front sight are free of oil or grease. The thread of the front sight screw should be secured using an industrial adhesive (for example Loctite 648). To tighten the front sight screw, apply a torque of 8.8 inch lbs (1 Nm).

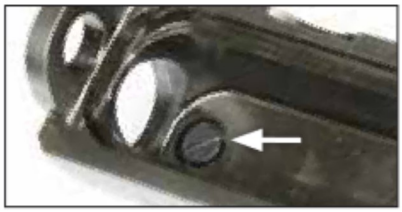

6.3 Fig. 2

7 THE WALTHER LEGENDARY LIFETIME LIMITED WARRANTY

- The Walther Legendary Lifetime Limited Warranty gives you absolute confidence in your decision when you purchase a WALTHER. With WALTHER, you can rely on the precision of German engineering and the dependability of an American guarantee. Our warranty provides unwavering support for your new firearm and continues for the lifecycle of the product as long as the company manufactures and supports it. If you purchase a WALTHER firearm, it carries its Legendary Warranty regardless of whether or not you are the original purchaser. This Warranty covers WALTHER centerfire and rimfire firearms produced after 1993 only and does not apply to antique, limited edition or custom firearms.
- If your WALTHER firearm has a defect in materials or workmanship, please contact WALTHER or return the firearm, postage paid, with a brief description of the problem to us at the following address for a repair or replacement at no cost to you:

  WALTHER ARMS, Inc.

  7700 Chad Colley Blvd

  Fort Smith, AR 72916
- This Warranty does not cover cosmetic blemishes or wear and tear associated with normal use.
- This Warranty does not cover any problems caused by abuse, misuse, or acts of God.
- This Warranty does not cover defects or damage caused by the use of parts or service not provided by WALTHER.
- WALTHER assumes no liability for consequential, punitive or other damages (except as set forth herein) related to a claim under this Warranty. A service and/or handling charge may be required for non-warranty repairs.
- This Warranty applies to the United States of America and covers only firearms currently produced and supported by WALTHER and distributed by WALTHER ARMS Inc. in Fort Smith Arkansas in the United States of America.
- This Warranty does not cover firearms that have been discontinued by Carl Walther or WALTHER ARMS Inc.

- This warranty gives you specific legal rights, and you may also have other rights which vary from state to state.

Warranty Claims and Repair for U.S. customers. Call WALTHER ARMS (479)-242-8500 and ask for the Service Department. If it is determined a return is necessary, you will be issued a Firearm Return Authorization Number. Write this number boldly on the box and return the product prepaid to WALTHER ARMS. Your name, address, phone number and a note with the model name/number, serial number, and explanation of the defect found must be included with the firearm. A copy of the original dated cash register receipt, or a copy of ATF Form 4473, indicating date of purchase must accompany the return.

It is important that the owner comply with all applicable federal, state and local laws and regulations in the shipment of the CREED pistol to the applicable WALTHER Service Center.

It is recommended that shipments be insured by the owner, since WALTHER will accept no responsibility for loss or damage in transit. Transportation and insurance charges for return to the owner will be paid by WALTHER if the claim is covered by this warranty.

UNDER NO CIRCUMSTANCES SHALL WALTHER BE RESPONSIBLE FOR INCIDENTAL OR CONSEQUENTIAL DAMAGES WITH RESPECT TO ECONOMIC LOSS, INJURY, DEATH OR PROPERTY DAMAGE, WHETHER AS A RESULT OF BREACH OF THIS WARRANTY, NEGLIGENCE OR OTHERWISE.
Some States do not allow the exclusion or limitation of incidental or consequential damages, so the above limitation or exclusion may not apply to you.

WALTHER will not be responsible for:

- Defects or malfunctions resulting from careless handling, unauthorized adjustments or modifications made or attempted by anyone other than a qualified gunsmith following WALTHER authorized procedures, or failure to follow the instructions in the WALTHER CREED Safety & Instruction manual.
- Use of defective or improper ammunition, corrosion, neglect, abuse, ordinary wear and tear, or unreasonable use.
- Use of replacement parts, other than WALTHER factory or authorized parts.
- Criminal misuse, negligence, or use under the influence of drugs or alcohol.

This warranty gives you specific legal rights and you may also have other rights, which vary from State to State.

Note: All liability is excluded in the event that the instructions and warnings in this manual are not observed.

8 CONTACT & SHIPPING

For Owners within the United States

WALTHER ARMS, Inc.
Attn: Service Dept
7700 Chad Colley Boulevard
Fort Smith, AR 72916

Phone: 1-479-242-8500
E-mail: service@waltherarms.com
www.WaltherArms.com

- Call or e-mail the Customer Service Dept. for authorization and shipping instructions.
- ENSURE THAT THE FIREARM IS UNLOADED.
- DO NOT SHIP ANY AMMUNITION.
- Enclose a letter which includes your full name and address (no P.O. Boxes, please), daytime telephone number, e-mail address, the serial number of the firearm, and details of the problem experienced (stating the brand and type of ammunition used when the problem occurred) or work desired.
- Record the serial number before shipping and retain in a secure place.
- Please remove all custom parts and accessories, such as stocks, special sights, or holsters from your firearm before returning.
- Place the handgun in its original case or in a similarly secure container and pack securely.
- When returning a pistol, please include all magazines ensuring they are unloaded; they are important to the proper function of the handgun.
- The package must NOT bear any markings which indicate the identity of the contents.
- It is most important that you comply with federal, state, and local laws and regulations. The following guidelines are meant to help, but you must seek assistance from the appropriate authorities if necessary.
- Do not attempt to ship a handgun via US Postal Service; only federally licensed dealers may ship a firearm by US Postal Service.

⚠ WARNING ANY MAINTENANCE OR SERVICE NOT SPECIFIED IN THIS MANUAL MUST BE PERFORMED BY A QUALIFIED GUNSMITH USING GENUINE WALTHER PARTS. IF YOU DO OTHER YOU MAY PURCHASE ACCESSORIES FOR YOUR WALTHER FIREARM. YOU MUST HAVE SOME OF THESE PARTS INSTALLED BY A GUNSMITH QUALIFIED TO PERFORM SERVICE ON WALTHER PISTOLS. YOU MUST NEVER ATTEMPT TO MODIFY YOUR FIREARM OR INSTALL REPLACEMENT PARTS IN YOUR FIREARM. ALWAYS USE A QUALIFIED WALTHER GUNSMITH EVEN IF THE REPAIR SEEMS TO BE SIMPLE. WISE, IMPROPER FUNCTIONING OF YOUR FIREARM MAY OCCUR AND SERIOUS INJURY OR DEATH OR DAMAGE TO PROPERTY MAY RESULT.

9. ACCESSORIES

Accessories for your WALTHER firearm are available from your local WALTHER Stocking Dealer, or directly from WALTHER ARMS, Inc.
Contact the Customer Service Department at 1-479-242-8500 or www.WaltherArms.com for information about these services.

⚠ WARNING

FROM THE MASSACHUSETTS ATTORNEY GENERAL:

This handgun is not equipped with a device that fully blocks use by unauthorized users. More than 200,000 firearms like this one are stolen from their owners every year in the United States. In addition, there are more than a thousand suicides each year by younger children and teenagers who get access to firearms. Hundreds more die from accidental discharge. It is likely that many more children sustain serious wounds, or inflict such wounds accidentally on others. In order to limit the chance of such misuse, it is imperative that you keep this firearm locked in a secure place and take other steps necessary to limit the possibility of theft or accident. Failure to take reasonable preventive steps may result in innocent lives being lost, and in some circumstances may result in your liability for these deaths.

WALTHER ARMS, INC.

7700 CHAD COLLEY BOULEVARD
FORT SMITH, AR 72916
PHONE: 1-479-242-8500

Copyright © 2016 · Carl Walther GmbH · All rights reserved · Subject to change without notice.

281 55 32.CW.06-16.15,0.21 Rev. a · Printed in Germany